BULL

HD 100

PERKINS 1104D-44TA, EU NRMM 97 / 68 / EC EURO III A
Gross Power: **74.5 kW (100 HP) @ 2200 RPM**
Max Torque: **410 Nm@1400RPM**

ZF Power Shift transmission with integral torque convertor

Power Steering

12V Battery System **(180 Ah)**

FRONT	**2 WD**	- 9 x 16 - 16 PR
	4 WD	- 12.5/80 x 18 - 12 PR
REAR	**Industrial**	- 16.9 x 28 - 12 PR
	Heavy Duty	- 14 x 25 - 20 PR

Forward max **37 Km/Hr**
Reverse max **22 Km/Hr**

Smart Technology hydraulics : **3335 psi (230 bar)**
Pump O/P: **145 LPM@2200 RPM**

8200 Kgs with Standard **GP** Bucket option

	System	*Service*
Hydraulic Tank	120 Ltr	100 Ltr
Fuel Tank	115 Ltr	-
Engine Coolant	17 Ltr	15 Ltr
Engine Oil	10 Ltr	10 Ltr
Transmission	19.5 Ltr	16 Ltr
Rear Axle	17 Ltr	17 Ltr
4WD Front Axle	8 Ltr	8 Ltr

AC Cabin | Loader Booster bucket with 12' 98" dump height

DIMENSIONS

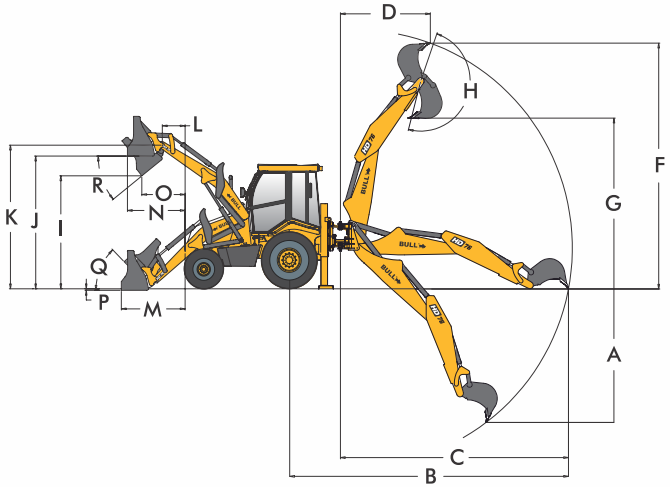

	LOADER PERFORMANCE	60HP	76HP	96HP	100HP
	Standard GP Bucket Capacity	1 cu.m	1.1cu.m	1.1 cu.m	1.2 cu.m
I	Dump Height	2.96 m	2.96 m	2.96 m	2.96 m
J	Load Over Height	3.39 m	3.39 m	3.39 m	3.39 m
K	Pin Height	3.61 m	3.61 m	3.61 m	3.61 m
L	Pin Forward Reach	0.42 m	0.42 m	0.42 m	0.42 m
M	Reach at Ground	1.47 m	1.47 m	1.47 m	1.47 m
N	Reach at full height	1.28 m	1.28 m	1.28 m	1.28 m
O	Reach at full Height bkt Dumping	0.89 m	0.89 m	0.89 m	0.89 m
P	Below ground level DIG Depth	0.1 m	0.1 m	0.1 m	0.1 m
Q	Roll back at Ground	49°	49°	49°	49°
R	Dump Angle	45°	45°	45°	45°
	Bucket Break-out Force	7178 Kgf	8183 Kgf	8183 Kgf	8793 Kgf
	Loader Arm Break-out Force	4606 Kgf	5251 Kgf	5251 Kgf	5642 Kgf
	Pay Load	1560 Kgf	1800 Kgf	1800 Kgf	2000 Kgf

	EXCAVATOR PERFORMANCE	60 HP	76 HP		96 HP		100 HP	
			Retraction STD	Telescopic Dipper (option)	Retraction STD	Telescopic Dipper (option)	Retraction STD	Telescopic Dipper (option)
	Standard Bucket Capacity	0.23 cu.m	0.27 cu.m		0.27 cu.m		0.27 cu.m	
A	Maximum DIG depth	3.56 m	4.60 m	5.59 m	4.60 m	5.59 m	4.60 m	5.59 m
B	Reach Ground Level to Rear wheel center	6.32 m	6.80 m	7.91 m	6.80 m	7.91 m	6.80 m	7.91 m
C	Reach at Ground level to slew center	5.10 m	5.50 m	6.60 m	5.50 m	6.60 m	5.50 m	6.60 m
D	Reach at full height to slew center	2 m	2.85 m	3.56 m	2.85 m	3.56 m	2.85 m	3.56 m
F	Maximum working height	5.40 m	5.92 m	6.77 m	5.92 m	6.77 m	5.92 m	6.77 m
G	Maximum Load over Height	3.74 m	4.14 m	5.02 m	4.14 m	5.02 m	4.14 m	5.02 m
H	Bucket Rotation power	200°	188°		188°		188°	
	Bucket Tear out force	5610Kgf	6072 Kgf		6072 Kgf		6392 Kgf	
	Dipper Tear out force	2200 Kgf	3150 Kgf		3150 Kgf		3316 Kgf	

WORLD'S BEST COMPONENTS

Sourced from world's leading manufacturers.

60 / 76 / 96 HP
Proven Kirloskar Engine
100 HP Perkin's Engine

60 / 76 / 96 HP
Carraro (Italy) Transmission
100 HP ZF (German) Transmission

Danfoss Brake
(Denmark)

Hydro Control (Italy) Valve

AKG (German)
Radiator Cooler

Cassapa (Italy) pump

Carraro (Italy) Axle

All dimensions, weights and timings are variable within 1.5%, BULL MACHINE reserves the right to change the specifications without prior notice.

MULTIPLE BUCKET OPTIONS

SALIENT FEATURES

All machines come with advanced features that enhance their performance, productivity and reliability to the highest level

More Bucket Breakout Force & Backhoe Bucket Capacity

Heavy Weight Champion 8000 Kg (550 Kg More Weight)

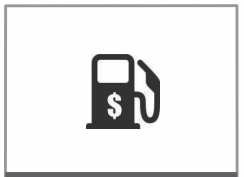
Most fuel efficient backhoe in the world in its class*

The Tallest Dumping Backhoe Loader in the World

Powder Coating : Scratch Resistant Painting

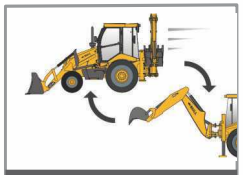
Effy power selector switch Wheel drive / backhoe

EASY TO MAINTAIN AT LOW COST

An Operator friendly machine that facilitates and alerts the operator for regular maintenance.

Engine high temperature Warning Alarm

Integrated oil filter with Breather

Front Opening Bonnet

Single layer Radiator/ Cooler: Easy to clean

WORLD CLASS CABIN COMFORT

Incorporated with features for the practical needs of the operator for uninterrrupted fatigue free working for longer hours.

Tiltable Steering

60/76/96 HP Forward reverse Switch

A/C Option

Joystick with Selector Switch

Our other range of TA products

India's No.1
Tractor Attachments

BULL MACHINES PVT.LTD,
Trichy Road, Coimbatore. INDIA
email: sales@bullmachine.com
exports@bullmachine.com

Dealer